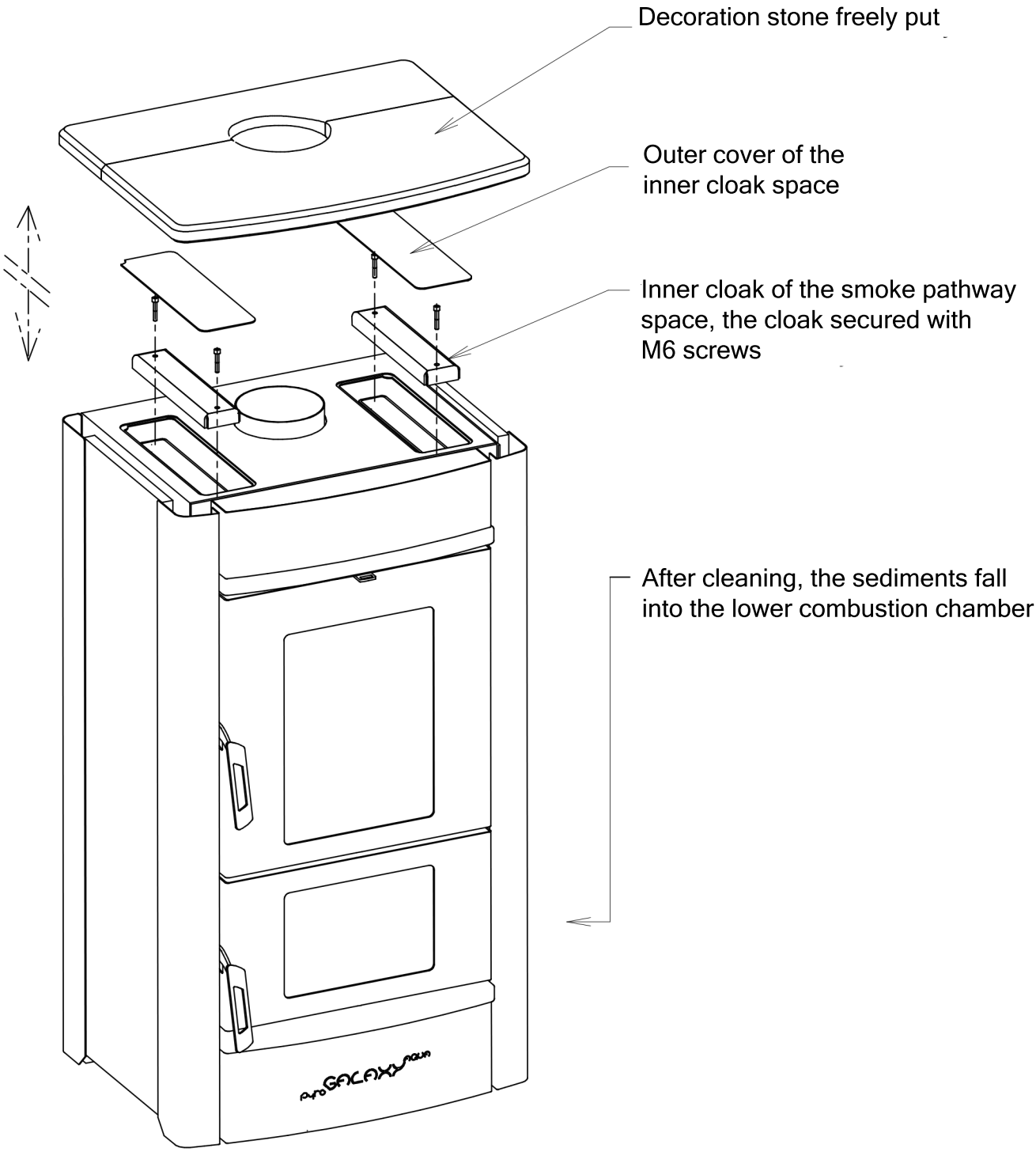


Smoke pathway space cleaning

Pyro GALAXY AQUA
8, 12, 16 kW