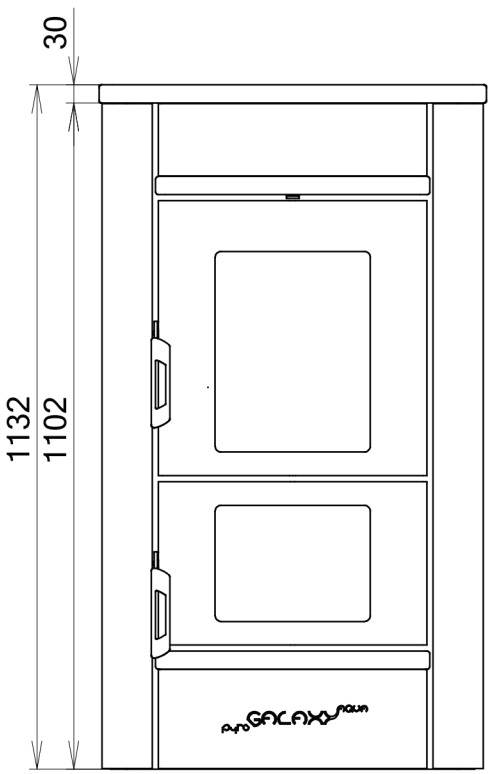

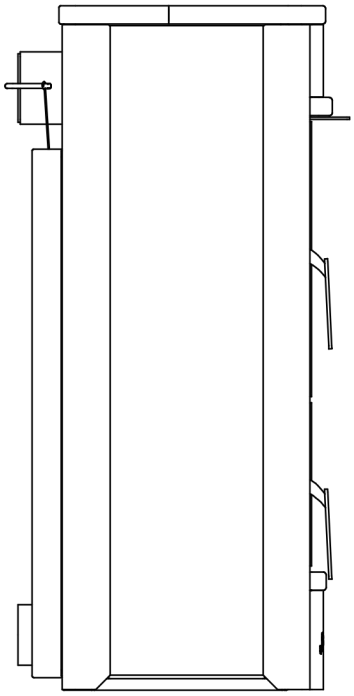

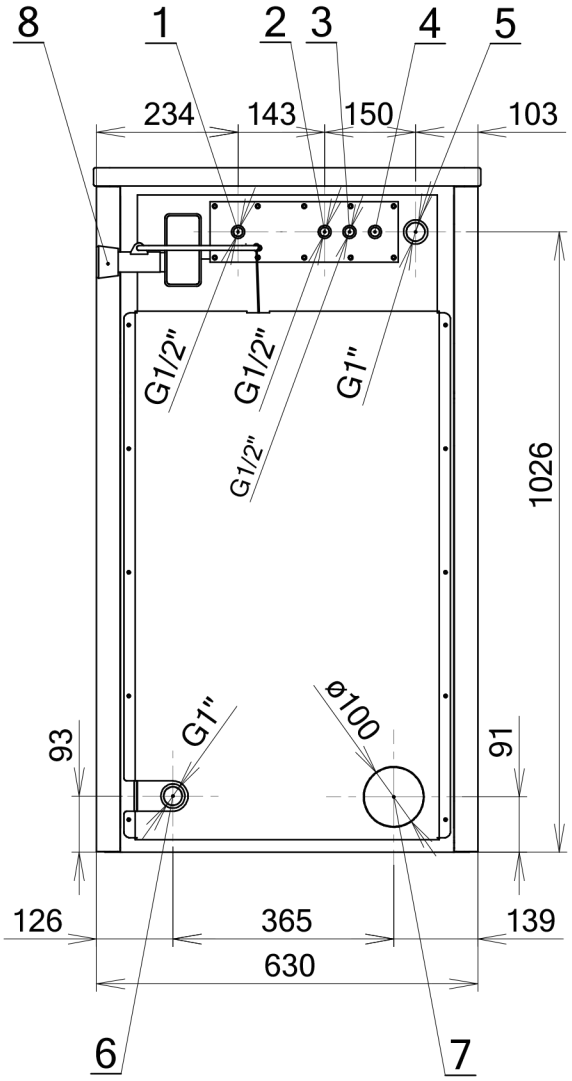

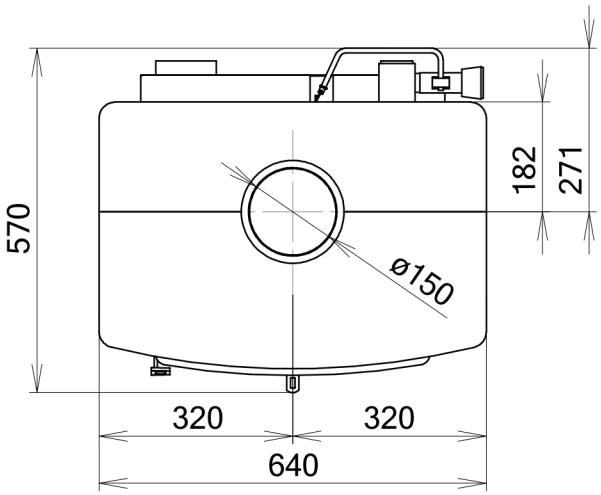

1 - Cooling circuit
2 - Cooling circuit
3 - Thermostatic sensor tank
4 - Thermostatic sensor tank
5 - Heat system circuit - water - output
6 - Heat system circuit - water - input
7 - External air supply for combustion
8 - Combustion air regulation thermostat

Technical sheet

Pyro GALAXY Aqua - 8kW